(19) Europäisches Patentamt
European Patent Office
Office européen des brevets

(11) EP 1 224 023 B1

(12) **EUROPEAN PATENT SPECIFICATION**

(45) Date of publication and mention of the grant of the patent:
18.05.2005 Bulletin 2005/20

(21) Application number: **00961540.2**

(22) Date of filing: **01.09.2000**

(51) Int Cl.[7]: **B01D 49/00**, B01D 69/02, B01D 63/06

(86) International application number:
PCT/US2000/024310

(87) International publication number:
WO 2001/017662 (15.03.2001 Gazette 2001/11)

(54) **CONTINUOUS PARTICLE AND MOLECULE SEPARATION WITH AN ANNULAR FLOW CHANNEL**

KONTINUIERLICHE TRENNUNG VON MOLEKÜLEN UND TEILCHEN MITTELS EINES RINGFÖRMIGEN STRÖMUNGSKANALS

SEPARATION CONTINUE DE PARTICULES ET DE MOLECULES A L'AIDE D'UN CANAL A ECOULEMENT ANNULAIRE

(84) Designated Contracting States:
CH DE FR GB IT LI

(30) Priority: **03.09.1999 US 152303 P**

(43) Date of publication of application:
24.07.2002 Bulletin 2002/30

(73) Proprietors:
- **THE CLEVELAND CLINIC FOUNDATION**
  Cleveland, OH 44195 (US)
- **THE OHIO STATE UNIVERSITY**
  Columbus, OH 43210-1063 (US)

(72) Inventors:
- **ZBOROWSKI, Maciej**
  Bay Village, OH 44140 (US)
- **CHALMERS, Jeff**
  Columbus, OH 43220 (US)
- **MOORE, Lee, R.**
  Cleveland Hts, OH 44118 (US)

(74) Representative: **Neill, Alastair William**
Appleyard Lees
15 Clare Road
Halifax West Yorkshire HX1 2HY (GB)

(56) References cited:

EP-A- 0 289 858	**DE-A- 19 860 117**
GB-A- 2 319 191	**US-A- 3 839 201**
US-A- 4 454 016	**US-A- 4 976 866**
US-A- 5 047 154	**US-A- 5 106 468**

- **DATABASE WPI Week 199301 Derwent Publications Ltd., London, GB; AN 1993-007930 XP002165930 & SU 1 714 480 A (VNIK I MED LAB TEKNI), 23 February 1992 (1992-02-23)**
- **DATABASE WPI Week 198111 Derwent Publications Ltd., London, GB; AN 1981-C2990D XP002165931 & SU 744 285 A (INST BIOLOGICHESKOI FIZ), 30 June 1980 (1980-06-30)**
- **DATABASE WPI Week 198525 Derwent Publications Ltd., London, GB; AN 1985-012778 XP002165932 & DD 213 360 A (ADW DDR), 9 December 1984 (1984-12-09)**

Note: Within nine months from the publication of the mention of the grant of the European patent, any person may give notice to the European Patent Office of opposition to the European patent granted. Notice of opposition shall be filed in a written reasoned statement. It shall not be deemed to have been filed until the opposition fee has been paid. (Art. 99(1) European Patent Convention).

EP 1 224 023 B1

Printed by Jouve, 75001 PARIS (FR)

Description

Field of the Invention

[0001] The invention relates generally to a device and method for continuously sorting particles and, more particularly, to a device and method for sorting particles through the use of an annular flow chamber and one or more types of separation forces.

Background of the Invention

[0002] Generally, particle separation devices separate particle populations of interest from a suspension and/or other types of particles. The principal method of operation of early particle separation devices relied on a particle's physical parameters to distinguish that particle from a suspension and/or other types of particles. Examples of these bulk separation techniques include filtration, which is based on particle size, and centrifugation, which is based on particle density. These techniques are effective as long as the particle population of interest is significantly different, with respect to size or density, from the suspension and/or the other particles in the population.

[0003] As a subset of bulk separating, continuous separation techniques also exist. The continuous separation of particles in flowing solution requires a well-defined and well-controlled fluid flow pattern. Typically, continuous particle separation devices employ rectangular separation channels. The rectangular geometry of such separation channels results in several advantages including, for example, ease of manufacture, ease of control of fluid flows inside the channels, and ease of design and implementation of forces that drive the separation.

[0004] However, rectangular separation channels also suffer from a drawback known as the sidewall effect. The sidewall effect distorts the fluid flow pattern at the side walls of the rectangular separation channel and, hence, adversely affects the performance of the sorting device such as, for example, its resolving power. Hence, it is highly desirable to provide methods and devices for separating particles that do not suffer from sidewall effects and can employ any one of a diverse number of separation forces.

[0005] DATABASE WPI Week 198111 Derwent Publications Ltd., London, GB; AN 1981-C2990D XP002165931 & SU 744285 A (INST BIOLOGICHESKOI FIZ), 30 June 1980 discloses an apparatus and method for the dielectro phoretic separation of dispersed suspended particles - by using central and outer electrodes in an ultrasonic vibration field connected to a synchronised supply.

Summary of the Invention

[0006] The present invention is particularly directed to continuous particle and molecule separation in flowing solutions. More particularly, the present invention addresses the issue of the sidewall effect by wrapping a separation channel around a cylinder running the length of the channel and by joining the sides of the channel to thereby eliminate any side walls. So configured, the separation channel has an annular cross-section that is enclosed by two coaxial cylinders. Such a transformation leaves the length of the separation channel unchanged with the width of the channel laid on the cylinder the separation channel width is equal to the difference between the radii of the two cylinder walls bounding the separation channel.

[0007] In addition, the present invention generates axially-symmetric separation forces that are coaxial with the annular separation channel to continuously separate particles of interest from a heterogeneous particle population. The heterogeneity can be based on, for example, magnetic susceptibility, particle size, thermal diffusion, phase solubility, and combinations of the preceding. Based on the heterogeneity, a separation force capable of interacting with the separand (i.e., particles subject to the separation process) is provided. The particles or separands can be non-organic (e.g., metals) or organic (e.g., cells, viruses, and molecules including proteins and DNA). The various embodiments of the present invention preferably employ an annular separation channel, an appropriate separation force, and flow compartments. In an embodiment, an annular separation channel having electrically conductive inner and outer cylindrical walls is used to generate an electrophoretic separation force. In another embodiment, an annular separation channel having electrically conductive inner and outer cylindrical walls is used to separate a dielectrophoretic separation force.

Brief Description of the Drawings

[0008] In the accompanying drawings which are incorporated in and constitute a part of the specification, embodiments of the invention are illustrated, which, together with a general description of the invention given above, and the detailed description given below, serve to example the principles of this invention.

Figure 1 is a schematic view of the annular separation channel of the present invention.

Figure 2 is a longitudinal section of the annular separation channel of the present invention along section lines 2-2 of Figure 1 and additionally showing carrier and sample injectors and separated fraction outputs.

Figure 6 is a cross-sectional view of an embodiment of the annular separation channel of Figure 1 suitable for electrophoretic separation and dielectrophoretic separation.

Detailed Description of Illustrated Embodiment

[0009] Referring now to Figure 1, a schematic view of the annular separation channel 100 is shown. The channel 100 has an outer cylindrical wall 102 (sometimes referred to as an "accumulation wall"), an inner cylindrical wall 104, and first and second cylindrical flow splitters 106 and 108, respectively. While two flow splitters are shown, there may be more flow splitters per channel than two.

[0010] So configured, the distribution of the flow rates between the carrier fluid injector 202, sample injector 204, separated fraction a 206, and separated fraction b 208, generate flow compartments that are used to divide the separand flow into individual flow compartments. The physical position of the flow compartments can then be adjusted by varying any one or more of the flow splitter location (*i.e.*, radius) in the annular separation channel, and carrier medium and sample flow rates. The distribution of the separation forces (i.e., magnitude and direction) across the cross-section of the annular channel 100, together with the position of the flow compartments, determine the results of the separation. Flow compartments are more fully described in U.S. Patent No. 5,968,820 to Zborowski et al. titled "Method for Magnetically Separating Cells into Fractionated Flow Streams" (hereinafter Zborowski).

[0011] Illustrated in Figure 2 is a longitudinal section of the annular separation channel 100, along with a schematic representation of carrier fluid injectors 202, sample fluid injector 204, and separated fractions "a" 206 and "b" 208. Figure 2 also illustrates a preferred system arrangement of the present invention for continuously separating particles with the various embodiments of the annular separation channel disclosed herein. Except as specifically noted in the embodiments to follow, the carrier fluid or medium is preferably phosphate-buffered saline at a physiological concentration of 0.15 mole per liter or other similar medium. Sample injector 204 introduces separands or particles preferably suspended in the same or similar fluid as the carrier medium. As will be presently described, a feature of the present invention is the development and use of radially directed forces "F," which may take the form of any one of a number of identities.

[0012] Referring now to Figures 2 and 6, an embodiment of the present invention employing either an electrophoretic or dielectrophoretic separation force "F" is shown. In this embodiment, the outer cylindrical wall 102 is made of an electrically conductive material at an electric potential of V2 volts. The inner cylindrical wall 104 is made of an electrically conductive material at an electric potential of V1 volts. Suitable electrically conductive materials include copper, steel, or metal alloy typically used for electrode construction. The electrically conductive material may be separated by an insulator to form a pattern on cylindrical walls 102 and 104 as shown in Figure 7. Examples of geometrical patterns used for electrode construction include interdigitated electrodes for dielectrophoresis. Sample injector 204 introduces separands or particles near the inner cylindrical wall 104 and carrier medium injuector 202 introduces a carrier medium into the flow channel. An electric potential difference, V2-V1, drives an electrically susceptible particles along the radial direction shown. This effect is known as electrphoretic mobility. Particles that are characterized by a large electrophoretic mobility are particularly affected. Particles differing in their electrophoretic mobility are collected in different fractions "a" 206 and "b" 208 at the exit from the annular channel. If electrical potential V1 is less than electrical potential V2, particles with large electrophoretic mobility tend to be collected in fraction "b" 208 and particles with lesser or no electrophoretic mobility factors tend to be collected in fraction "a" 206.

[0013] Figures 2 and 6 are also applicable to dielectrophoretic separation forces. The difference between electrophoretic separation and dielectrophoretic separation being that a varying electric field is used in dielectrophoretic separation, whereas a static electric field is used for electrophoretic separation. Therefore, the above discussion of electrophoretic separation is equally applicable to dielectrophoretic separation with the exception of the varying electric fields as represented by varying potentials V1 and V2.

[0014] Referring now to Figure 7, a separation channel 700 particularly suitable for dielectrophoresis is shown. The channel 700 includes a plurality of electrodes on outer cylindrical wall 102 such as, for example, electrodes 714 and 716, and inner cylindrical wall 104 such as, for example, electrodes 710 and 712. An insulator 715 resides between electrodes 714 and 716. Similarly, an insulator 711 resides between electrodes 710 and 712. The electrodes and insulators are preferably interdigitated as shown in Figure 7 with equal distances between the electrodes. However, the distances may also be non-equally spaced to either concentrate or dilute the generated electrical forces.

[0015] A first source providing varying electrical potential V1 is in circuit communication with the inner cylindrical wall 104 electrodes. More specifically, positive terminal 702 and negative terminal 704 provide each pair of electrodes such as, for example, electrodes 712 and 710, respectively, with the varying electrical potential V1. This configuration of electrode connection is continued through the entire inner cylindrical wall 104 electrodes with the electrode next to electrode 712 being connected to the opposite terminal. In this manner, each pair of electrodes are of opposite polarity and have an insulator therebetween. A second source providing varying electrical potential V2 is in circuit communication with the outer cylindrical wall 102 electrodes. In particular, positive terminal 706 and negative terminal 708 provide each pair of electrodes such as, for example, electrodes 716 and 714, respectively, with the varying electrical potential V2. This configuration of electrode

connection is also continued through the entire outer cylindrical wall 102 electrodes with the electrode next to electrode 716 being connected to the opposite terminal. In this manner, each pair of electrodes are of opposite polarity and have an insulator therebetween.

[0016] Additional advantages and modifications will readily appear to those skilled in the art. For example, the sorting methods and apparatuses of the present invention may also be applied to particles other than cells, such as cell organelles, viruses, inorganic particles, such as soil particles, and molecules such as proteins and DNA. The distribution of particles between sorted fractions can be controlled by adjusting the properties of the carrier medium and/or the separation forces. For example, increasing or decreasing the flow rate of the carrier medium decreases or increases the amount of time a separand is within the annular separation channel. Changing the magnitude of the separation force or the distribution of magnitude of the separation force between the inner and outer cylindrical walls of the annular separation channel changes the distribution of particles between sorted fractions. Therefore, the invention, in its broader aspects, is not limited to the specific details, the representative apparatus, and illustrative examples shown and described.

Claims

1. A channel (700) for separating particles comprising:

(a) a first cylindrical wall (104) having a first radius;
(b) a first plurality of electrodes (710) interdigitated along at least a portion of the first cylindrical wall (104);
(c) a second cylindrical wall (102) having a second radius, the second radius being greater than the first radius;
(d) a second plurality of electrodes (714) interdigitated along at least a portion of the second cylindrical wall (102); and
(e) a space between the first (104) and second (102) cylindrical walls configured to allow development of a dielectrophoretic force.

2. The channel of claim 1 wherein the first plurality of electrodes comprises a plurality of electrodes each configured circumferentially on the inner cylindrical wall.

3. The channel of claim 2 wherein the second plurality of electrodes comprises a plurality of electrodes each configured circumferentially on the outer cylindrical wall.

4. A method of separating particles within a channel (700) as claimed in claim 1, 2 or 3, the method comprising the steps of:

(a) generating a first electrical potential; wherein this step comprises applying the first potential to the first plurality of electrodes (710/714) interdigitated along at least a portion of the first cylindrical wall (102/104);
(b) generating a second electrical potential; wherein this step comprises applying the second potential to the second plurality of electrodes (714/710) interdigitated along at least a portion of the second cylindrical wall (104/102);
(c) continuously introducing a plurality of particles into a space between the first electrical potential and the second electrical potential;
(d) subjecting the particles to a radial electrophoretic force causing at least some of the particles to undergo radial displacement; and
(e) continuously recovering at least a portion of the particles.

5. The method of claim4 wherein the first electrical potential is a varying electrical potential.

6. The method of claim5 wherein the second electrical potential is a varying electrical potential.

7. A method according to claim 4, 5 or 6, wherein the first cylindrical wall comprises a wall of a first cylinder, whilst the second cylindrical wall comprises a wall of a second cylinder, the first and second cylinders being coaxial and the particles being separated in a separation channel comprising an annular space between the first and second cylinders.

Patentansprüche

1. Kanal (700) zum Trennen von Teilchen, der umfasst:

(a) eine erste zylindrische Wand (104) mit einem ersten Radius;

(b) eine erste Vielzahl von Elektroden (710), die entlang wenigstens eines Teils der ersten zylindrischen Wand (104) ineinander greifen;

(c) eine zweite zylindrische Wand (102) mit einem zweiten Radius, wobei der zweite Radius größer ist als der erste Radius;

(d) eine zweite Vielzahl von Elektroden (714), die entlang wenigstens eines Teils der zweiten zylindrischen Wand (102) ineinander greifen; und

(e) einen Raum zwischen der ersten (104) und

der zweiten (102) zylindrischen Wand, der so ausgeführt ist, dass er Entstehung einer Dielektrophorese-Kraft ermöglicht.

2. Kanal nach Anspruch 1, wobei die erste Vielzahl von Elektroden eine Vielzahl von Elektroden umfasst, die jeweils in Umfangsrichtung an der inneren zylindrischen Wand ausgeführt sind.

3. Kanal nach Anspruch 2, wobei die zweite Vielzahl von Elektroden eine Vielzahl von Elektroden umfasst, die jeweils in Umfangsrichtung an der äußeren zylindrischen Wand ausgeführt sind.

4. Verfahren zum Trennen von Teilchen in einem Kanal (700) nach Anspruch 1, 2 oder 3, wobei das Verfahren die folgenden Schritte umfasst:

(a) Erzeugen eines ersten elektrischen Potentials, wobei dieser Schritt das Anlegen des ersten Potentials an die erste Vielzahl von Elektroden (710/714) umfasst, die entlang wenigstens eines Teils der ersten zylindrischen Wand (102/104) ineinander greifen;

(b) Erzeugen eines zweiten elektrischen Potentials, wobei dieser Schritt das Anlegen des zweiten Potentials an die zweite Vielzahl von Elektroden (714/710) umfasst, die entlang wenigstens eines Teils der zweiten zylindrischen Wand (104/102) ineinander greifen;

(c) kontinuierliches Einleiten einer Vielzahl von Teilchen in einen Raum zwischen dem ersten elektrischen Potential und dem zweiten elektrischen Potential;

(d) Ausüben einer radialen Elektrophorese-Kraft auf die Teilchen, die bewirkt, dass wenigstens einige der Teilchen radiale Verschiebung erfahren; und

(e) kontinuierliches Zurückgewinnen wenigstens eines Teils der Teilchen.

5. Verfahren nach Anspruch 4, wobei das erste elektrische Potential ein veränderliches elektrisches Potential ist.

6. Verfahren nach Anspruch 5, wobei das zweite elektrische Potential ein veränderliches elektrisches Potential ist.

7. Verfahren nach Anspruch 4, 5 oder 6, wobei die erste zylindrische Wand eine Wand eines ersten Zylinders umfasst, während die zweite zylindrische Wand eine Wand eines zweiten Zylinders umfasst und der erste sowie der zweite Zylinder koaxial sind und die Teilchen in einem Trennkanal getrennt werden, der einen ringförmigen Raum zwischen dem ersten und zweiten Zylinder umfasst.

Revendications

1. Canal (700) pour séparer des particules, comprenant:

(a) une première paroi cylindrique (104) qui possède un premier rayon;
(b) de multiples premières électrodes (710) interdigitées le long d'une partie au moins de la première paroi cylindrique (104);
(c) une seconde paroi cylindrique (102) qui possède un second rayon, le second rayon étant supérieur au premier rayon;
(d) de multiples secondes électrodes (714) interdigitées le long d'une partie au moins de la seconde paroi cylindrique (102); et
(e) un espace situé entre les première (104) et seconde (102) parois cylindriques et configuré pour permettre le développement d'une force diélectrophorétique.

2. Canal selon la revendication 1, dans lequel les multiples premières électrodes comprennent plusieurs électrodes configurées chacune circonférentiellement sur la paroi cylindrique intérieure.

3. Canal selon la revendication 2, dans lequel les multiples secondes électrodes comprennent plusieurs électrodes configurées chacune circonférentiellement sur la paroi cylindrique extérieure.

4. Procédé de séparation de particules au sein d'un canal (700) tel que défini dans la revendication 1, 2 ou 3, le procédé comprenant les étapes qui consistent à:

(a) générer un premier potentiel électrique; cette étape comprenant l'application du premier potentiel au multiples premières électrodes (710/714) interdigitées le long d'une partie au moins de la première paroi cylindrique (102/104);
(b) générer un second potentiel électrique; cette étape comprenant l'application du second potentiel aux multiples secondes électrodes (714/710) interdigitées le long d'une partie au moins de la seconde paroi cylindrique (104/102);
(c) introduire continuellement de multiples particules dans un espace situé entre le premier potentiel électrique et le second potentiel électrique;
(d) soumettre les particules à une force électro-

phorétique radiale obligeant certaines au moins des particules à subir un déplacement radial; et
(e) récupérer en continu une partie au moins des particules.

5. Procédé selon la revendication 4, dans lequel le premier potentiel électrique est un potentiel électrique variable.

6. Procédé selon la revendication 5, dans lequel le second potentiel électrique est un potentiel électrique variable.

7. Procédé selon la revendication 4, 5 ou 6, dans lequel la première paroi cylindrique comprend une paroi d'un premier cylindre, tandis que la seconde paroi cylindrique comprend une paroi d'un second cylindre, les premier et second cylindres étant coaxiaux et les particules étant séparées dans un canal de séparation comprenant un espace annulaire situé entre les premier et second cylindres.

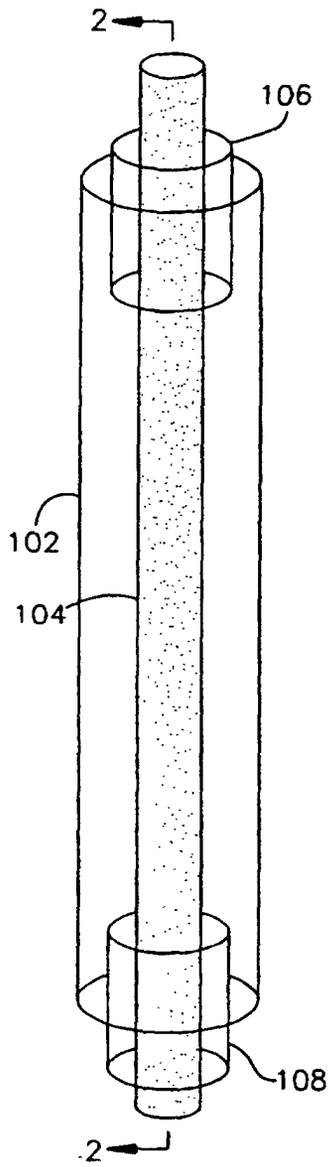
2
106
102
104
108
2

Fig.1

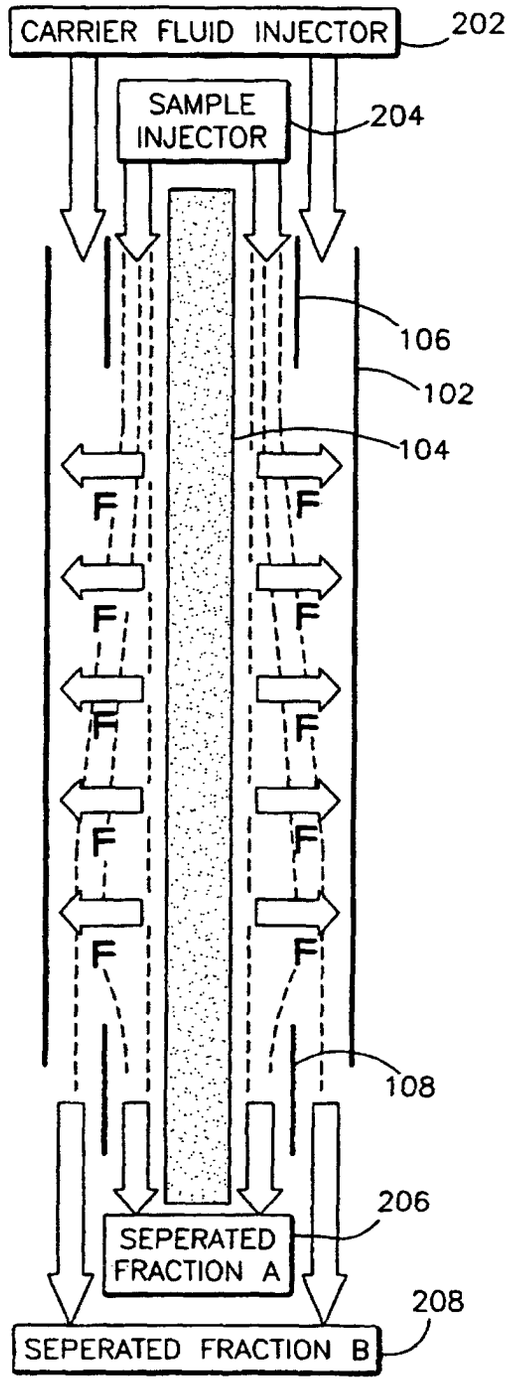
CARRIER FLUID INJECTOR
202
SAMPLE INJECTOR
204
106
102
104
F
108
206
SEPERATED FRACTION A
208
SEPERATED FRACTION B

Fig.2

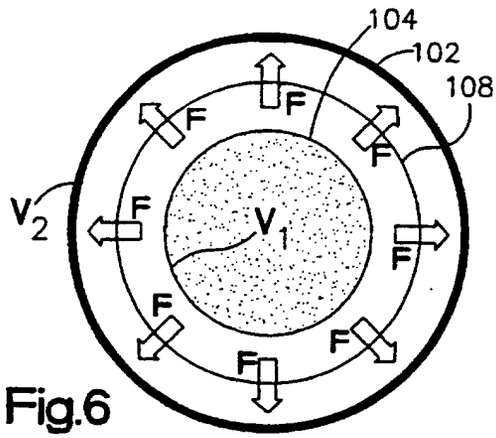

Fig.6

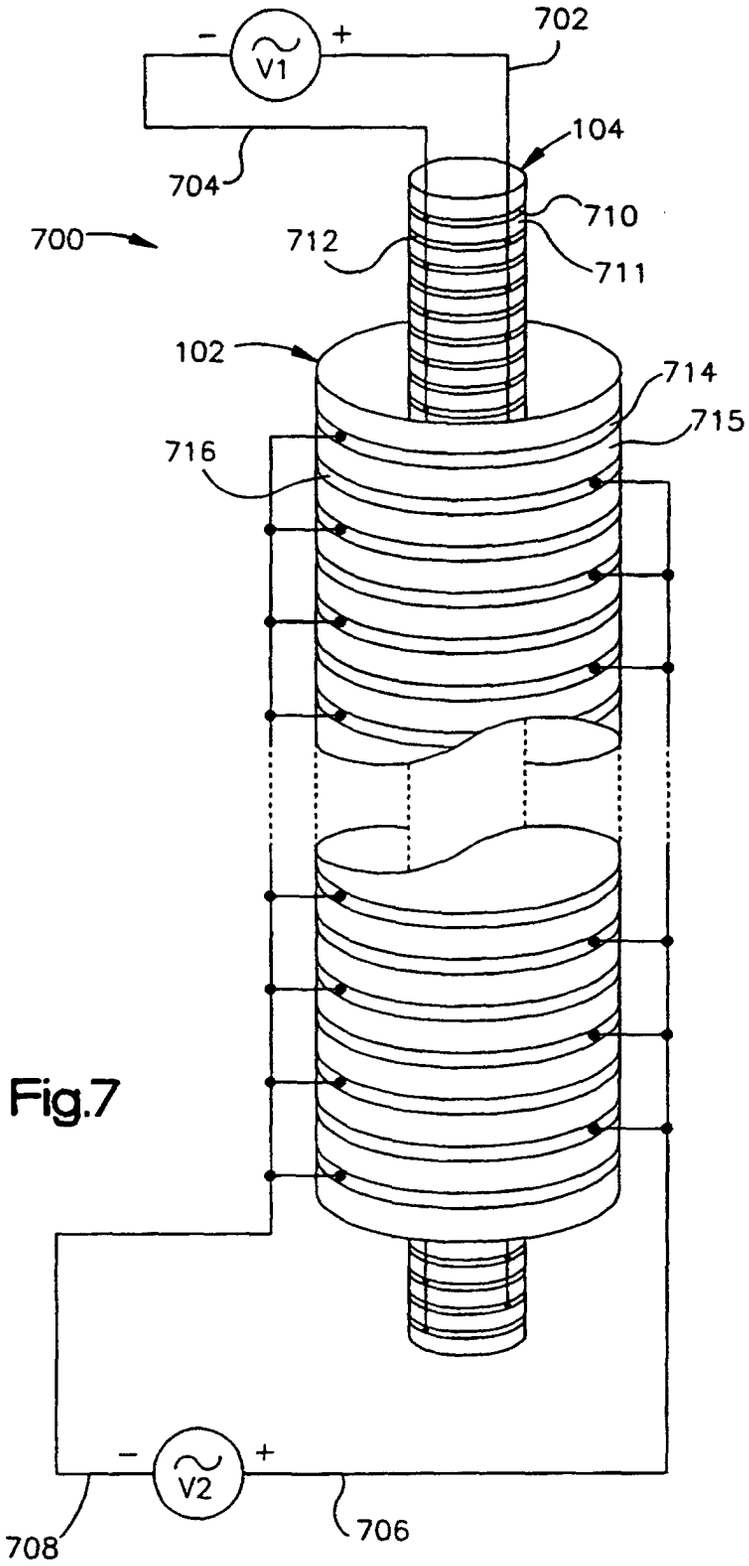

Fig.7